- INSULATED DAMPER
- EXTRUDED ALUMINUM AIRFOIL BLADE
- ULTRA-LOW LEAKAGE
- HIGH PERFORMANCE

MODELS:

2010IB/IBF PARALLEL BLADE

2020IB/IBF OPPOSED BLADE

AIRFOIL

Model 2020IBF

The Series 2010IB/IBF and 2020IB/IBF are Nailor's premium insulated dampers featuring rugged extruded aluminum airfoil blades, suitable for use in high velocity, medium pressure commercial and industrial systems.

These ultra-low leakage dampers with insulated blade and frame, help limit thermal conductivity as well as air infiltration, making them ideal for use in more extreme applications. Features include a choice of heavy-duty frames, no-maintenance concealed linkage and unique design compression type seals that are keyed and locked into the blade extrusion, providing low pressure drop and high performance. Model 2020IBF is AMCA licensed for air leakage and air performance and meets the IEC Code maximum leakage for building envelope dampers criteria of 3 cfm/ft^2 (15.2 l/s/m^2).

STANDARD CONSTRUCTION:

FRAME:	5" x 7/8" x 16 ga. (127 x 22 x 1.6) galvanized steel hat channel with die-formed corner gussets for reinforcement and extra strength.
BLADES:	Airfoil type 6063-T5 extruded aluminum on 5 1/2" (140) centers.
INSULATION:	Blades: Polyurethane foam; R value 2.19 (IB/IBF models). Frame: Polystyrene foam; (Included with IBF model only).
LINKAGE:	Concealed side type totally enclosed within the frame and out of the airstream. Plated steel.
BEARINGS:	1/2" (13) dia. Oilite® self-lubricating bronze.
AXLES:	1/2" (13) dia. plated steel double bolted to blades.
DRIVE SHAFT:	6" (152) long x 1/2" (13) dia. rigid driveshaft; or optional lock-on shaft with outboard support bracket (standard in Canada), on all single section dampers. A 1/2" (13) or 1" (25) dia. factory installed jackshaft is standard on all multiple section dampers
BLADE SEALS:	Silicone. Mechanically locked into place.
JAMB SEALS:	Cambered stainless steel.
MINIMUM SIZE:	Single blade (parallel) 8" x 8" (203 x 203). Two blades (parallel or apposed) 8" x 12" (203 x 305)**.**
MAXIMUM SIZE:	Single section size is 60" x 72" (1524 x 1829). Multiple section - unlimited.

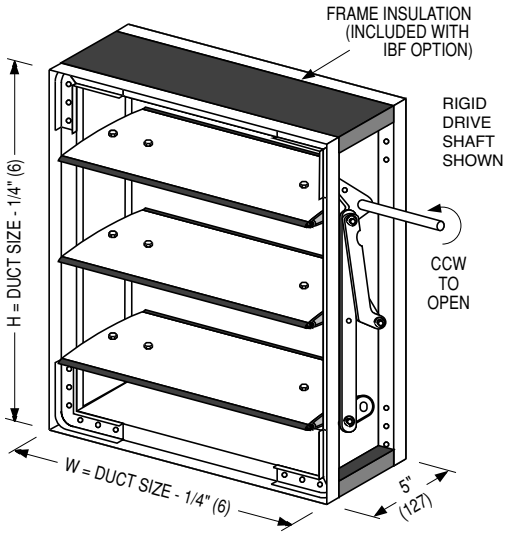

NOTE: IB MODEL: INSULATED BLADE ONLY
IBF MODEL: INSULATED BLADE AND FRAME

MODELS 2010IB/IBF
PARALLEL BLADE

MODELS 2020IB/IBF
OPPOSED BLADE

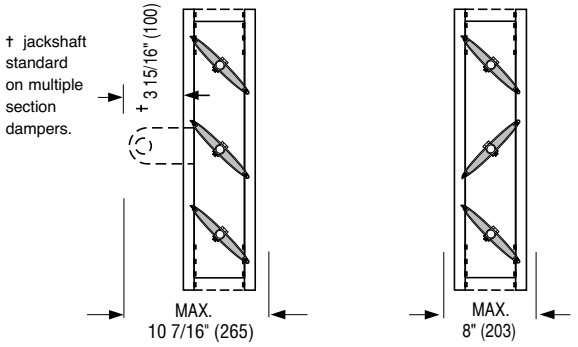

A WORD ABOUT INSULATED DAMPERS…

Air infiltration between the damper blades and frame is the most significant factor attributed to frost build-up on and around outside air dampers which can lead to damper/actuator damage and potential for further system damage such as coil freeze-ups etc. With an ultra-low mean leakage rate of 0.18 CFM/sq. ft. (0.91 l/s per sq. meter) at 1" w.g. static pressure combined with insulated blades and frame, the Nailor 2000IBF Series provides the protection required for many applications in harsher climates….

NAILOR COMBINES THE LOWEST LEAKAGE MULTI-BLADE DAMPER, THAT IS AMCA LICENSED, WITH THE LOW HEAT CONDUCTIVITY DESIGN OF INSULATED BLADE AND FRAME. This combination provides excellent protection for colder ambient conditions!

PERFORMANCE LIMITATIONS:

DAMPER WIDTH IN.	DAMPER WIDTH MM	MAXIMUM SYSTEM PRESSURE	MAXIMUM SYSTEM VELOCITY
60	1524	5.0" w.g.	3000 FPM
48	1219	8.0" w.g.	4000 FPM
36	914	10.0" w.g.	4500 FPM
24	610	12.0" w.g.	5000 FPM
12	305	14.0" w.g.	6000 FPM

The 2000 Series with its standard maximum single section and multiple section sizing limitation may be used in applications with system pressures of up to 5.0" w.g.. The 2000 Series may also be used in systems with higher total pressures by reducing the damper section width as shown in the table.

PRESSURE DROP:

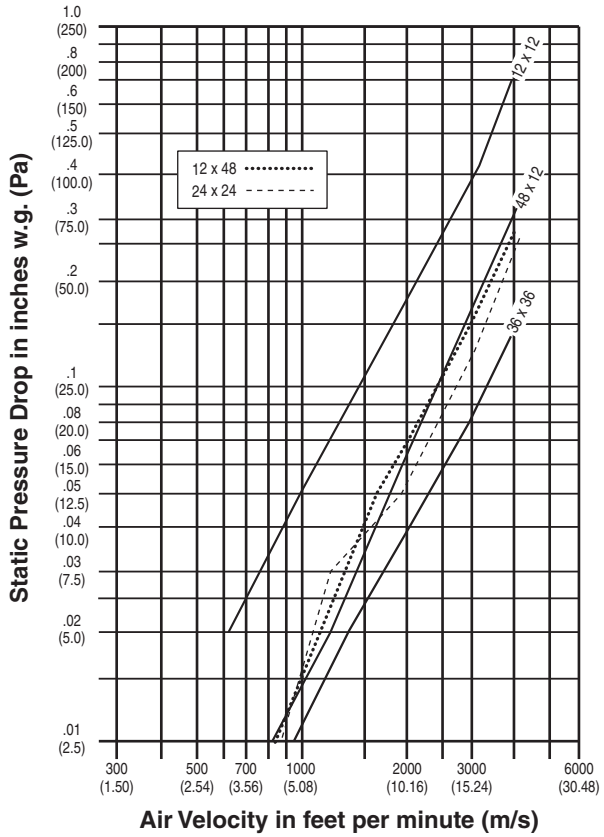

Pressure drop tested per AMCA Standard 500-D-98, Figure 5.3. Data corrected to standard air density of 0.075 lbs/ft.^{3}.

LEAKAGE CLASS:

DAMPER WIDTH	@ 1" w.g. (0.25 kPa)	@ 4" w.g. (1.0 kPa)	@ 8" w.g. (2.0 kPa)	@ 12" w.g. (3.0 kPa)
12" (305)	1A	1A	1A	1A
24" (305)	1A	1A	1A	1A
36" (305)	1A	1A	1A	—
48" (305)	1A	1A	—	—
60" (305)	1A	1A	—	—

Maximum leakage permitted for Class rating is as follows:

Class 1A: 3 cfm/sq. ft. @ 1" w.g. (15.2 l/s/m^2 @ 0.25 kPa)
8 cfm/sq. ft. @ 4" w.g. (40.6 l/s/m^2 @ 1.0 kPa)
11 cfm/sq. ft.@ 8" w.g. (55.9 l/s/m^2 @ 2.0 kPa)
14 cfm/sq. ft.@ 12" w.g. (71.1 l/s/m^2 @ 3.0 kPa)

Leakage tested in accordance with AMCA Standard 500-D-98. Data based on a torque of 8" lbs./sq. ft. (minimum 20" lbs.) applied to hold the damper in closed position. Leakage class is based on operation between 50°F and 104°F (10°C and 40°C). Data corrected to standard air density of 0.075 lbs./ft.^{3}

Temperature Range: -50°F to 250°F (-45°C to 157°C)

Nailor Industries Inc. certifies that the Model 2020IBF Damper shown herein is licensed to bear the AMCA seal. The ratings shown are based on tests and procedures performed in accordance with AMCA Publication 511 and comply with the requirements of the AMCA Certified Ratings Program. The AMCA Certified Ratings Seal applies to air leakage ratings and air performance ratings. Model 2010IBF is not licensed to bear the AMCA seal.

MODELS: 2010IB/IBF
2020IB/IBF

AVAILABLE OPTIONS / ACCESSORIES:

The following construction options and accessories are available on Models 2010IB / IBF and 2020IB / IBF.
See page B55 for detailed description of options/accessories.

	CODE	DESCRIPTION
FRAME MATERIAL:	EAF	Extruded Aluminum Frame Note: For Extruded Aluminum Frame details, see Models 2010EAF/2020EAF
	SSF	Stainless Steel Frame
FRAME TYPE:	FF	Front Flange
	FR	Rear Flange
	FD	Double Flange Note: Flange Options are not available on EAF or SSF frame styles.
FRAME GAUGE:	14G	14 Gauge
	13G	13 Gauge
	12G	12 Gauge Note: Frame Gauge Option applies to standard galvanized steel frame only.
INSULATION:	IB	Insulated Blades Only
	IBF	Insulated Blades and Frame
BLADE LINKAGE:	SSL	Stainless Steel Linkage
	SSA	Stainless Steel Axes Only
BEARINGS:	BS	Stainless Steel Bearings
	BT	Thrust Bearings
ROUND/OVAL TRANSITION:	CR	Transition Casing for Round Duct
	CO	Transition Casing for Oval Duct
OPERATOR ACCESSORIES:	HLQ	Hand Locking Quadrant
	PCE	External Chain Operator
	PCI	Internal Chain Operator
	FMO	Factory Mounted Actuator-Outside w/ side plate
	FMI	Factory Mounted Actuator-Internal w/ jackshaft
	JK5	1/2" (13) Dia. Jackshafting for Single Section
	JK1	1" (25) Dia. Jackshafting for Single Section
	VCK	Vertical Interconnection Kit

At Nailor Industries, we take pride in our flexibility to meet the needs of your specific applications. The options listed above provide a variety of commonly used modifications to satisfy the majority of today's diverse requirements. Should your application require a more unique configuration, please consult your authorized Nailor Representative or the Nailor Industries office nearest you for assistance.

HOW TO SPECIFY OR TO ORDER

MODELS: 2010IB/IBF and 2020IB/IBF

HOW TO ORDER:

Standard construction is shown in highlighted box. Option codes are listed below. See previous page for description of options.

MODEL	SIZE (W X H)	FRAME MATERIAL	FRAME TYPE	FRAME GAUGE	INSULATION	DRIVE LOCATION	OPTIONAL BLADE LINKAGE	BEARINGS	ROUND/OVAL TRANSITION	OPERATOR ACCESSORIES
2010	ie: 48 x 24	**GLV**	**HC**	**16G**	**IB or IBF**	**DR/DL**	**–**	**BO**	**–**	**–**
2020		EAF	FF	14G	↑		SSL	BT	CR	HLQ
		SSF	FR	13G			SSA	BS	CO	FMO
			FD	12G						FMI
										PCE
										PCI
										JK5
										JK1
										VCK

Notes: 1. ↑ Arrow indicates 'must select' option.
2. Right hand driveshaft is standard. For left hand driveshaft simply rotate the damper so that the driveshaft is on left hand side, as blade and jamb seals are designed to work with airflow in either direction. 1/2" (13) or 1" (25) dia. jackshafting is standard on all multiple section wide units.
3. If Pull Chain Operator option is selected, please specify length of chain required.
4. Frame Type Options FF, FR, FD, and Frame Gauge Options are only available on standard galvanized steel frame.
5. If Option CR Round Transition casing (or CO) is selected please order by duct size diameter ie: 36"ø.

SUGGESTED SPECIFICATION:
Provide and install, as shown on plans and/or schedules, ultra low-leakage insulated dampers meeting or exceeding the following criteria: Frame shall be constructed of 16 ga. (1.6) galvanized steel hat channel with mitered corners and die-formed corner gussets for rigidity and structural strength equivalent to 13 ga. (2.4) channel type frames. Frame shall be insulated with polystyrene type foam having an R value of 5.0, on minimum of three sides. (Specifier to delete this sentence if IB option, insulated blades only, is required.) Blades shall be of Type 6063-T5 extruded aluminum airfoil design on maximum 6" (152) centers with integral structural reinforcing tube running full length of each blade. Blades shall be internally insulated with polyurethane type foam having an R value of 2.19. Blade axles shall be 1/2" (13) dia. plated steel, double thru-bolted to blade at each end to provide positive locking connection. Hex or square friction-fit, or press-fit axles are not acceptable. Bearings shall be Oilite® self-lubricating bronze type. Blade linkage shall be zero-maintenance, out of airstream and totally concealed within the frame. Jackshafts shall be supplied on all multiple section assemblies in order to evenly distribute torque. Blade seals shall be extruded silicone mechanically locked in extruded blade slots. Adhesive or clip-on type blade seals are not acceptable. Jamb seals shall be compression type stainless steel. All seals shall be field replaceable.
Submitted performance data, including leakage and pressure drop, to be based on tests in accordance with AMCA Standard 500-D. Dampers must comply with the requirements of AMCA 511 Certified Ratings Program and be qualified to bear the AMCA Seal for Air Leakage and Air Performance. Damper widths from 12" to 60" (305 to 1524) shall meet leakage Class 1A criteria of maximum 3 cfm/sq. ft. (15.2 l/s/m^2) at 1" w.g. (.25 kPa) and 8 cfm/sq. ft. (40.6 l/s/m^2) at 4" w.g. (1 kPa). Standard of acceptance: Nailor Industries Model 2020IBF (opposed blade).

Specifier Notes: For Extruded Aluminum Frame (Option EAF) replace frame construction specification above with the following: Frame shall be constructed of Type 6063-T5 extruded aluminum hat channel design of minimum 0.125" (3.2) thickness.

For CR Round Transition Option, add the following:

Damper shall be provided with a 20 ga. (1.0) galvanized steel casing for sizes up to 36" (914) dia., 18 ga. (1.31) for larger sizes, complete with round collar on both sides. Casing shall be welded and caulked against leakage. Standard of acceptance: Nailor Industries Model 2010IBFCR (parallel blade) or Model 2020IBFCR (opposed blade).